Hereditary & High Risk Breast and Ovarian Cancer Evaluation & Management

Rebecca Moroose MD
Director Office of Clinical Trials
Director Cancer Genetics

ORLANDO HEALTH®

UFHealth CANCER CENTER

May 19, 2018

Hereditary & High Risk Breast and Ovarian Cancer Syndrome Management

- Objectives:
  - Update the most current guidelines for risk assessment and mitigation in hereditary and high risk breast and ovarian cancer patients
  - Review decision making for risk reduction, the pros and cons, and patient outcomes including quality of life.
  - Provide options for management of side effects of risk reducing strategies
  - Acknowledge the growing science of multi-gene panel testing and the challenges of Variants of Uncertain Significance

My patient:

- 48 year old Hispanic woman referred by PCP for discussion of genetic testing results.
- PMH + for type II diabetes, hypertension, hyperlipidemia and recent weight gain.
- Social history: Married, housekeeper, does not smoke or use alcohol.
- Gravida III para III. Onset of menses age 13.
- Premenopausal and taking no endocrine therapy.

My Patient's 4 Generation Pedigree

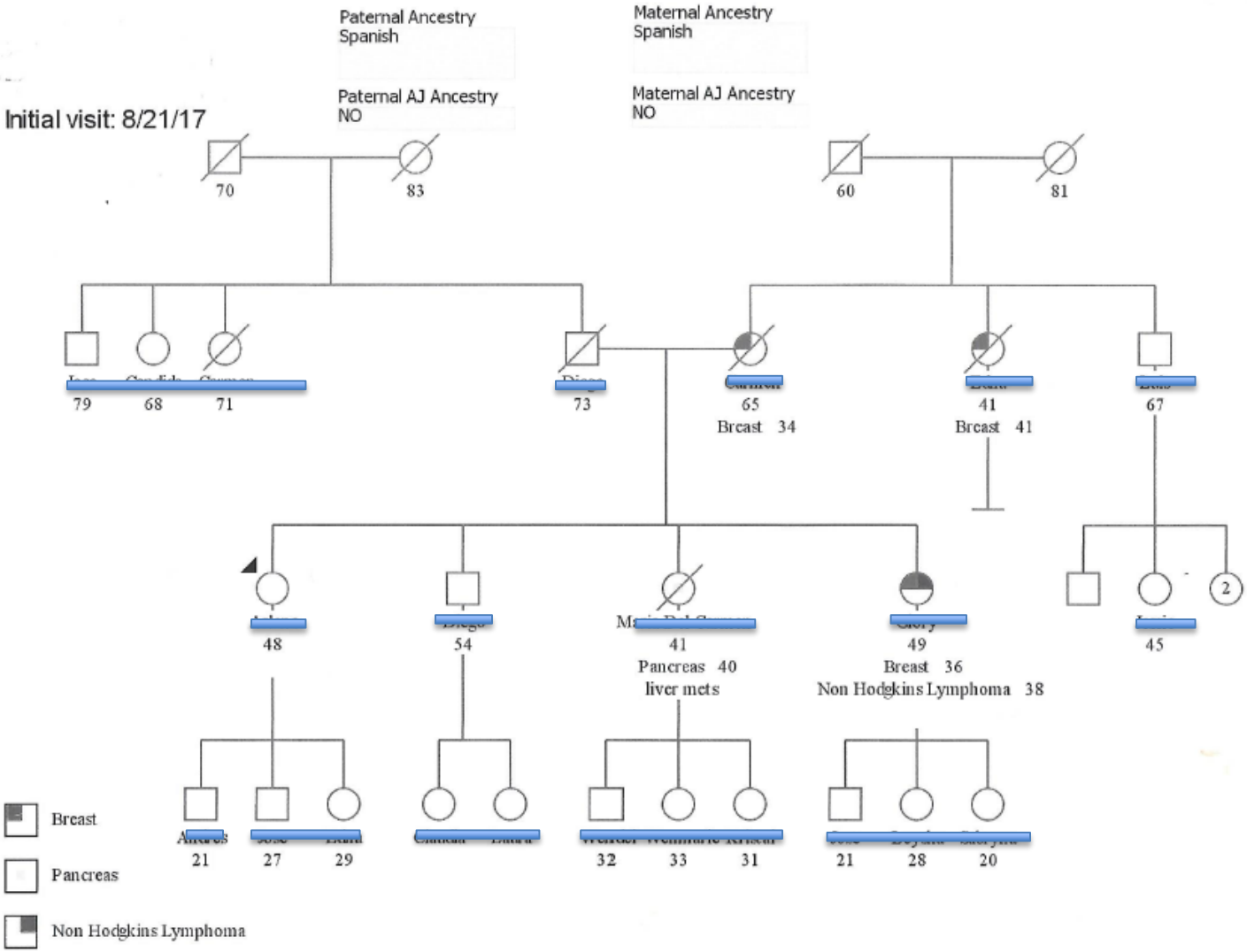

When to Suspect a Hereditary Form of Cancer

- Early age at diagnosis
- Same cancer in 2 or more close relatives
  - On the same side of the family
  - Multiple generations
- Multiple primaries or bilateral cancer
- Rare cancers
- Clustering of cancers consistent with a specific cancer syndrome

Clusters of Cancer

- Hereditary Breast & Ovarian cancer syndrome (BRCA genes)
  - Female breast, ovarian, male breast, pancreatic and prostate cancer
- Cowden syndrome
  - Breast, endometrial and thyroid cancer
- Li-Fraumeni syndrome
  - Breast, sarcoma, brain, adrenal (cortical) and leukemia
- Lynch syndrome (HNPCC)
  - Colon, endometrial, stomach and ovarian cancer
- Polyposis syndromes
  - 10 or more colorectal polyps
- Multiple Endocrine Neoplasia syndromes
  - Pancreatic (islet cell) cancer, parathyroid hyperplasia, pituitary adenoma
  - Medullary thyroid cancer, parathyroid hyperplasia, pheochromocytoma

Subsets of Tumors and Rare tumors associated with hereditary cancer syndromes

- Triple-negative breast cancer
  - 10-30% have BRCA1 gene mutation
- Male breast cancer
  - 10-15% have BRCA2 gene mutation
- Ovarian/fallopian tube/primary peritoneal cancer
  - Up to 25% is hereditary
- Endometrial cancer diagnosed before age 50 (Lynch syndrome)
- Adrenal cortical cancer
  - 14/21 patients in a study had Li-Fraumeni syndrome
- Medullary thyroid cancer
  - 25% due to MEN2
- Pheochromocytoma or Paraganglioma
  - Associated with MEN2, VHL and SDH genes

Approach to Genetic Counseling and Risk Assessment

- What is the patient's question?
  - *Risk of developing cancer vs.*
  - *Risk of carrying a deleterious germline mutation?*
  - *What do they want to know and what don't they want to know?*

My Patient's Testing Scenario

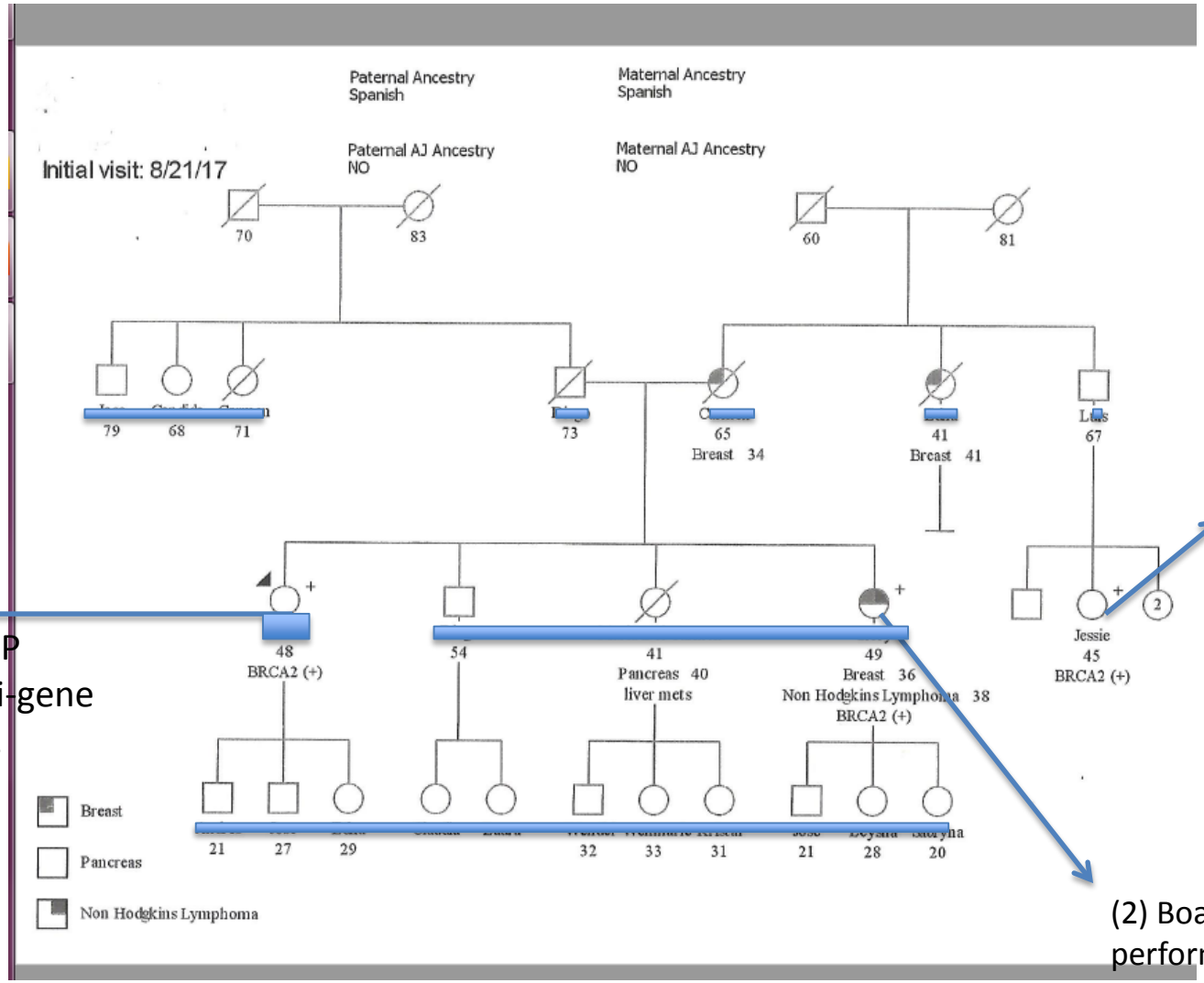

(1)Had multi-Gene panel BRCA2+

(3) Patient's PCP Repeated multi-gene panel. BRCA2+.

(2) Board certified GC performed site specific testing for familial mutation in BRCA2.

BRCAPRO: BayesMendel

Risk Calculations

RelativeID: 0

Return to Pedigree

Save to Database

Print

Exit

BRCAPRO: BayesMendel

Carrier Probabilities

BRCA1 or BRCA2	1.0000
BRCA1	0.0000
BRCA2	1.0000
BRCA1 and BRCA2	0.0000

Probabilities

Age	Breast	Ovary
53	0.093	0.020
58	0.177	0.047
63	0.252	0.085
68	0.313	0.132
73	0.363	0.183
78	0.407	0.233
83	0.443	0.276

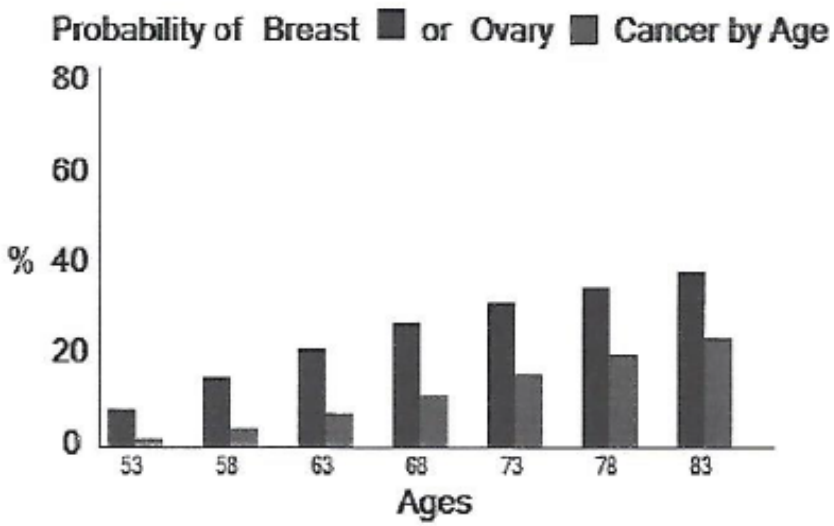

Output Manager Gail Chen Claus BRCAPRO MMRpro MELAPRC PANCPRO

What if my patient tested negative for a germ line pathogenic mutation?

- Does she still qualify for risk reduction strategies?

All cancers are genetic – most are not hereditary

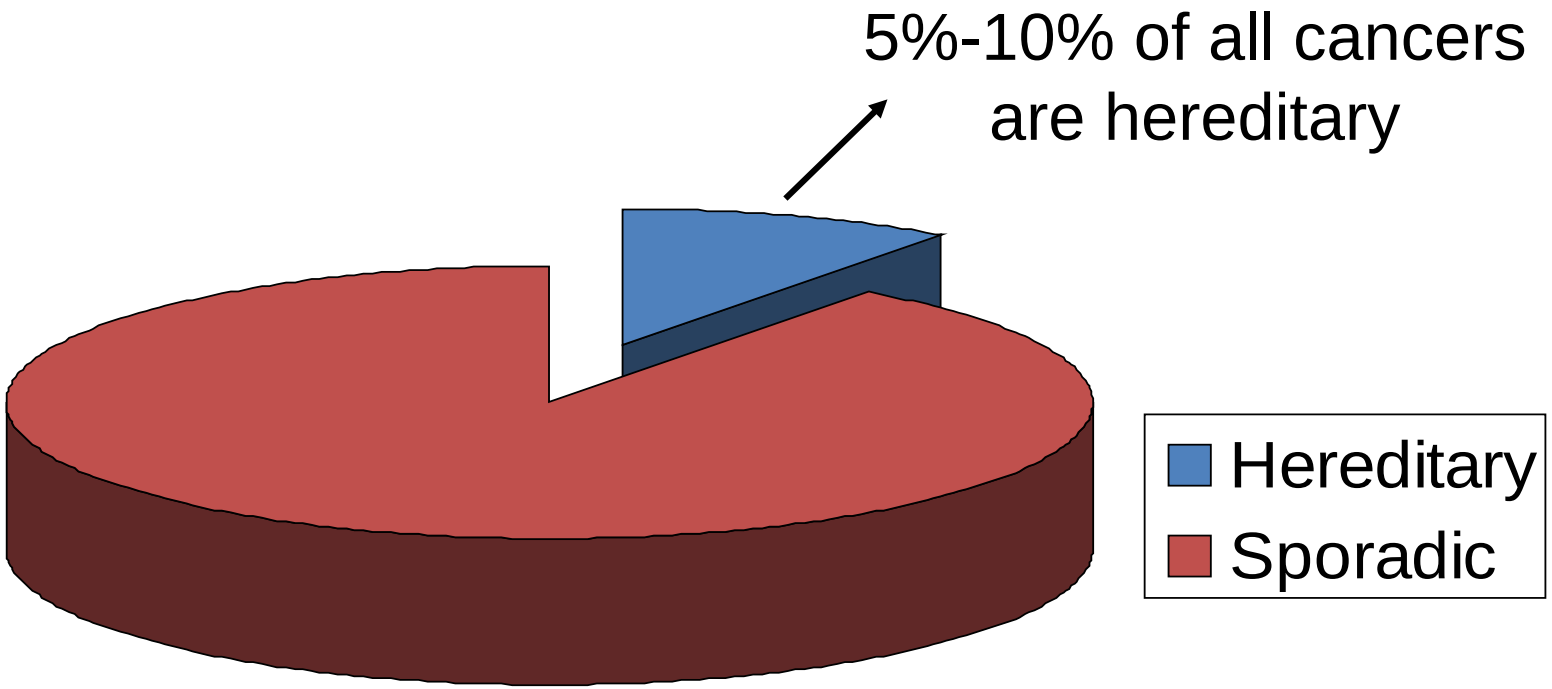

- 90-95% of cancers are sporadic
- likely due to nonhereditary (environmental) factors

Breast Cancer Risk Modeling

- *Which Model to Use?*
  - *Gail Model*
  - *IBIS or Tyrer-Cuzick*
  - *BOADICEA*
  - *Claus*
  - **Assessing Breast Cancer Risk and *BRCA*1/2 Carrier Probability. Culver, Lowstuter and Bowling. Breast Disease 27 (2006,2007) 5-20.**

IBIS (Tyrer–Cuzick) Score if Patient had not undergone genetic testing

IBIS Risk Evaluation, v7

January 29, 2018

ID:

Woman's age is 48 years.
Age at menarche was 13 years.
Age at first birth was 19 years.
Person is premenopausal.
Height is 1.6002 m.
Weight is 80 kg.
Woman has never used HRT.

Risk after 10 years is 10%.
10 year population risk is 2.5%.
Lifetime risk is 28.5%.
Lifetime population risk is 11.8%.
Probability of a BRCA1 gene is 12.97%.
Probability of a BRCA2 gene is 9.55%.

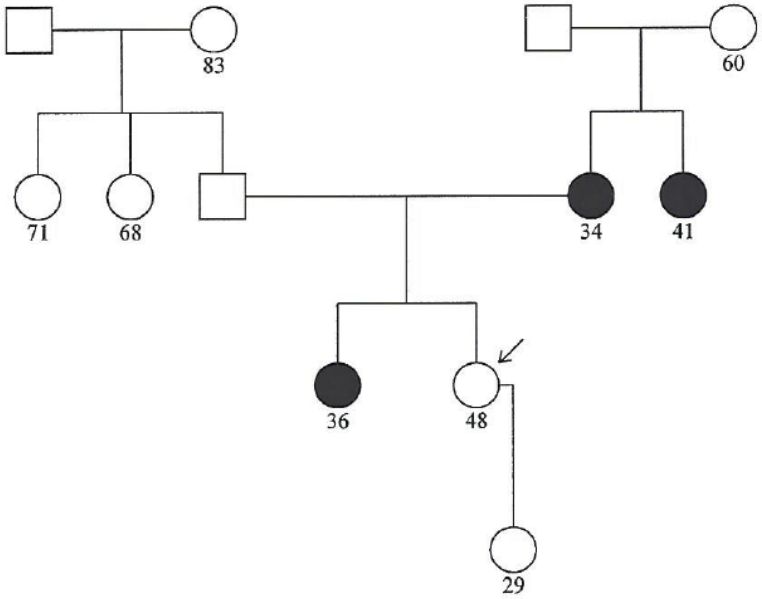

IBIS (Tyrer-Cuzick) v.8 score if no testing

ID:

Age is 48-yrs.
Age at menarche 13-yrs.
Age at first birth 19-yrs.
Premenopausal.
Height is 1.0006 m.
Weighs 80 kg.
Never used HRT.

Risk after 10 years is 8.8%.
10 year population risk is 2.5%.
Lifetime risk is 26.3%.
Lifetime population risk is 11.8%.
Probability of a BRCA1 gene is 11.21%.
Probability of a BRCA2 gene is 9.12%.

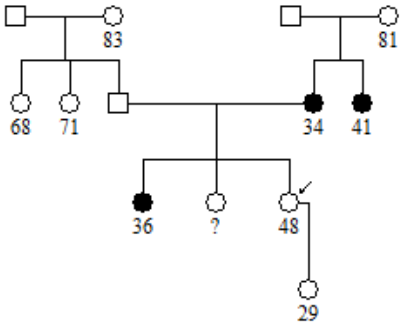

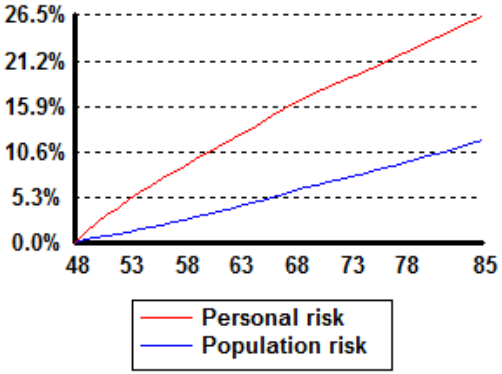

Copy to Clipboard
Print
Close

TC with results of genetic test + for BRCA2

ID:
Age is 48-yrs.
Age at menarche 13-yrs.
Age at first birth 19-yrs.
Premenopausal.
Height is 1.0006 m.
Weighs 80 kg.
Never used HRT.

Risk after 10 years is 28.2%.
10 year population risk is 2.5%.
Lifetime risk is 61.4%.
Lifetime population risk is 11.8%.
Probability of a BRCA1 gene is 0%.
Probability of a BRCA2 gene is 100%.

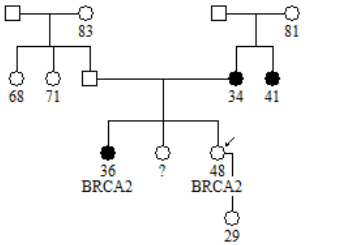

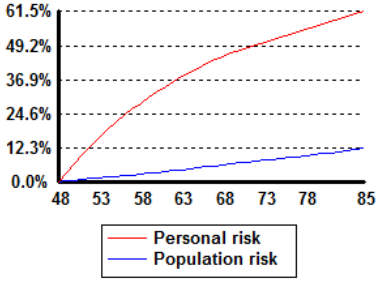

Copy to Clipboard
Print
Close

TC with results of patient (- for BRCA2); sister and sister +

ID:

Age is 48-yrs.
Age at menarche 13-yrs.
Age at first birth 19-yrs.
Premenopausal.
Height is 1.0006 m.
Weighs 80 kg.
Never used HRT.

Risk after 10 years is 4.2%.
10 year population risk is 2.5%.
Lifetime risk is 19.5%.
Lifetime population risk is 11.8%.
Probability of a BRCA1 gene is 0%.
Probability of a BRCA2 gene is 0%.

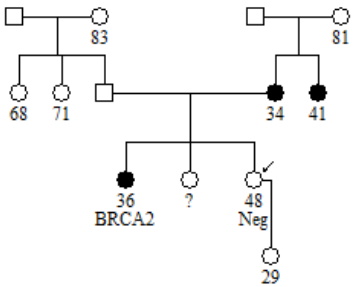

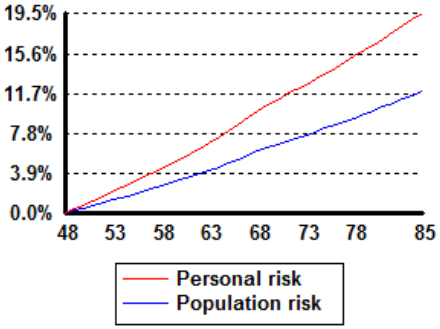

Copy to Clipboard
Print
Close

Other Elements of Risk (non hormonal and non hereditary/familial)

- Elements that increase risk or require investigation:
  - History of thoracic radiation prior to age 30 elevates breast cancer risk up to 35% (55 fold increase in LESGT*)
  - No information – patient adopted, family members estranged (consider genetic testing)
  - Mammographic breast density (is this hereditary/familial?)
- Elements that decrease risk:
  - Breast feeding
  - Oophorectomy before age 45
  - Exercise
  - Prior risk reducing therapy

  - *Late Effects Study Group Trial

What did I recommend for my patient?

Guidelines Driven Management

NCCN National Comprehensive Cancer Network®

NCCN Clinical Practice Guidelines in Oncology (NCCN Guidelines®)

Genetic/Familial High-Risk Assessment: Breast and Ovarian

Version 1.2018 — October 3, 2017

NCCN.org

NCCN Guidelines HBOC for Women www.nccn.org

- Breast awareness starting at age 18 y.
- Clinical breast exam, every 6-12 mo, starting at age 25 y
- Breast screening:*
  - Age 25-29, annual breast MRI screening with contrast (Tomosynthesis if MRI unavailable)
  - Age 30-75 y, annual mammogram with consideration of tomosynthesis and breast MRI screening with contrast
    - Preferably alternating every 6 months
    - ***Abridged MRI protocol***
    - ***Lehman, Lee, DeMartini. Screening MRI women with a personal history of breast cancer. J NCI 2016.**
    - ***Passaperuma, Warner, Causer. Long-term results of screening with magnetic resonance imagine in women wit BRCA mutations. Br J Cancer 2102.**

NCCN Guidelines Women with HBOC

www.nccn.org

- Discuss option of risk-reducing mastectomy
  - Degree of protection (90%+ reduction in risk)*
  - Reconstruction options**
  - Residual breast cancer risk with age and life expectancy
- Nipple sparing/skin sparing techniques
- Implant versus autologous tissue reconstruction

  - ***Li, You, Wang, et al. Effectiveness of prophylactic surgeries in BRCA 1 or BRCA2 mutation carriers: a meta-analysis and systemic review. Clin Cancer Res 2016.**
  - ****Morrow, Mehrara. Prophylactic mastectomy and the timing of breast reconstruction. Br J Surgery 2009.**

For those who do not elect RRM:

- Consider risk reducing agents
  - **Tamoxifen (pre and post menopausal – 35 y +) 20 mg per day for 5 years shown to reduce risk of breast cancer by 49%*. Favor BRCA2 over BRCA1.**
  - **Raloxifene (post menopausal – 35 y +) 60 mg per day for 5 years equivalent to tamoxifen but may be less efficacious long term. May still be the choice over tamoxifen if uterus intact. No data on *BRCA1 & BRCA2* carriers.**
  - **Aromatase inhibitors :anastrazole & exemestane(post menopausal – 35 y +) not FDA approved for risk reduction. Not studied in *BRCA1 & BRCA2.***
    - **Exemestane 25 mg per day reduced relative risk of breast cancer by 65% with median follow up of 3 yrs.**
    - **Anastrazole 1 mg per day reduced relative incidence by 53% median follow up of 5 years**

Confer ~ 50% reduction in breast cancer risk in high risk populations; not well studied in *BRCA1/2* populations compared to other risk groups. Limited retrospective data suggest there may be a benefit.*

*Rutqvist, Cedermark, Glas. Contralateral primary tumors in breast cancer patients in a randomized trial of adjuvant tamoxifen therapy. JCNI 1991.

King, Wieand, Hale,. Tamoxifen and breast cancer incidence among women with inherited mutations in BRCA1 and BRCA2: NSABP P1 Trial. JAMA2001.

Risk Reducing Agents in *BRCA1/2* Patients

- Subset analysis of NSABP P-1 Prevention Trial revealed that breast cancer risk was reduced by 62% in patients with *BRCA2* mutation receiving tamoxifen relative to placebo.*
- Tamoxifen use was not associated with a reduction in breast cancer risk in patients with BRCA1 mutation.*
- May be related to the greater likelihood of developing ER+ tumors in *BRCA2* mutation carriers.
- Analysis was limited due to very small numbers of patients with *BRCA1 & BRCA2* mutations in the study.

***King, Wieand, Hale, et al. Tamoxifen and breast cancer incidence among women with inherited mutations in BRCA1 and BRCA2: NSABP P1. JAMA 2001.**

Clinical Symptoms/Scenarios Associated with Risk Reducing Medications

- Arthralgias (Aromatase Inhibitors)
- Hot flashes (tamoxifen, raloxifene, exemestane, anastrozole)
- Abnormal vaginal bleeding (tamoxifen) – rule out endometrial cancer if uterus intact
- Bone mineral density (pre and post menopausal)
- Anticipated elective surgery – discontinue tamoxifen or raloxifene due to VTE risk; resume when ambulatory.
- DVT/PE/CVA or prolonged immobilization: discontinue tamoxifen/raloxifene and treat underlying condition.
- Cataracts
- Sexual side effects.
- Psychologic side effects.
- High rate of discontinuation due to side effects

Hot Flash Management

Gabapentin: 420 patients with breast cancer randomized to 300 mg/day gabapentin; 900 mg/day gabapentin; and placebo for 8 weeks. Most were on adjuvant tamoxifen.

<u>Reduction in severity of hot flashes at 4 & 8 weeks:</u>

Placebo: 21% and 15%

Lower dose gabapentin: 33% and 31%

Higher dose gabapentin: 49% and 46% (somnolence and fatigue reported).

Pandya, Morrow, Rosco, et al. Gabapentin for hot flashes in 420 women with breast cancer: a randomised double-blind placebo-controlled trial. Lancet 2005.

Hot Flash Management

- **Venlafaxine** – start 37.5 mg and increase to 75 mg if needed (mouth dryness, reduced appetite, nausea, constipation)*
- **Paroxetine** – 65% reduction in hot flashes on 12.5 mg or 25 mg per day (nausea, dizziness, and insomnia). Paroxetine may reduce plasma levels of the 4-OH and endoxifen active metabolites of tamoxifen, thus may impact the efficacy of tamoxifen**
- **Citalopram** (10 -30mg) and venlafaxine appear to have minimal impact on tamoxifen metabolism
- ***Loprinzi, Kugler, Sloan, et al. Venlafaxine in management of hot flashed in survivors of breast cancer. Lancet 2005. **Stearns, Beebe, Iyengar, Dube. Paroxetine controlled release in the treatment of menopausal hot flashes. JAMA 2003; Sideras, Ingle, Ames. Coprescription of tamoxifen and medications that inhibit CYP2D6. JCO 2010.

Hot Flash Management

- Oral and transdermal **clonidine** (dry mouth, constipation, drowsiness)*
- **Vitamin E + Vitamin B6** modest improvement **
- Black cohosh – no improvement over placebo***
- Placebo effect – 25%
- Relaxation training (largely unsupported)
- Acupuncture
- Avoidance of caffeine and alcohol (largely unsupported)
- Exercise

- ****Nelson, Vesco, Haney, et al. Nonhormonal therapies for menopausal hot flashes: systemic review and meta-analysis. JAMA 20016.**
- ***Goldberg, Loprinzi, O'Fallon, et al. Transdermal clonidine for ameliorating tamoxifen-induced hot flashes. JOC 1994.**
- ***** NCCTG Trial N01CC1; JCO 2006**

Other Risk Reducing Strategies

- **Healthy lifestyle:**
  - Consider breast cancer risks associated with combined estrogen/progesterone therapy ≥3-5 year's duration of use*
  - Limit alcohol consumption to less than 1 drink per day (serving equals: 1 ounce of liquor, 6 ounces of wine, or 8 ounces of beer)**
  - Exercise***

***Fournier, Mesrine, Boutron-Ruault, Clavel-Chapelon. Estrogen-progestagen menopausal hormone therapy and breast cancer: does delay from menopause onset to treatment influence risks? JCO 2009.**
****Bagnardi, Rota, Botteri, Light alcohol drinking and cancer: a meta-analysis. Ann Oncol. 2013.**
*****Tehard, Friedenreich, Oppert, Clavel-Chapelon. Effect of physical activity on women at increased risk of breast cancer: results from the E3N cohort study. Cancer Epidemio Biomarkers Prev 2006.**

Other Risk Reducing Strategies

- **Weight control –** overweight or obese at higher risk for postmenopausal breast cancer; Women with *BRCA1* mutations with a weight loss of ≥ 10 pounds between ages of 18 and 30 was associated with a decreased risk of developing breast cancer between ages 30 to 40 years. *
- **Breast feeding –** for every 12 months of breast feeding, relative risk for breast cancer decreases by 4.3% **
- **Vitamin D supplementation ***

***Eliassen, Colditz, Rosner, et al. Adult weight change and risk of postmenopausal breast cancer. JAMA 2006. **Collaborative Group on Hormonal Factors in Breast C. Breast cancer and breastfeeding. Lancet 2002. *** Blackmore, Lesosky, Barnett, et al. Vitamin D from dietary intake and sunlight exposure and the risk of hormone-receptor defined breast cancer. Am J Epidemiol 2008.**

NCCN Guidelines Women with HBOC

- **Discuss option of risk-reducing salpingo-oophorectomy** (**RRSO)**, typically between age 35-40 y, and on completion of child bearing. 80-85% reduction in fallopian or ovarian cancer; 1-4.3% residual risk for primary peritoneal cancer.* Increased risk for serous/and or serous like endometrial cancer in BRCA1 without hysterectomy**
- * **Rebbeck, Kauff, Domchek. Meta-analysis of risk reduction estimates associated with risk-reducing salpingo-oophorectomy for prevention of BRCA1 and BRCA2 associated breast and gynecologic cancer. JCO 2008. Kauff, Domchek, Friebel, et al. Risk-reducing salpingo-oophorectomy for the prevention of BRCA1 and BRCA2 associated breast and gynecologic cancer. JCO 2008. ** Finch, Shaw, Rosen. Clinical and pathologic findings of prophylactic salpingo-oophorectomies in 159 BRCA1 and BRCA2 carriers. Gynecol Oncol 2006. Shu, Pike, Jotwani. Uterine cancer after risk-reducing salpingo-oophorectomy without hysterectomy in women with BRCA mutations. JAMA Oncology 2016.**

Oral Contraceptive Use

- Two meta-analyses showed that oral contraceptive use (especially low dose formulations) is not significantly associate with breast cancer risk in *BRCA*1/2 mutation carriers.*
- Case control studies have shown oral contraceptives reduced the risk for ovarian cancer by 45-50% in *BRCA*1 mutation carriers and by 60% in *BRCA*2 carriers.**

*** Iodice, Barile, Rotmensz. Oral contraceptive use and breast or ovarian cancer risk in BRCA1/2 carriers. Eur Cancer 2010. Moorman, Havrilesky, Gierischl Oral contraceptives and risk of ovarian cancer and breast cancer among high-risk women. JCO 2013. ** McLaughlin, Risch, Lubinski. Reproductive risk factors for ovarian cancer carriers of BRCA1 or BRCA2 mutations. Lancet Oncology 2007. Narod, Risch, Moslehil Oral Contraceptives and the risk of hereditary ovarian cancer. NEJM 1998.**

Risk Reducing Salpingo-Oophorectomy

- Because ovarian cancer onset in patients with *BRCA2* mutations is an average of 8-10 years later than in patients with *BRCA1* mutation, it is reasonable to delay RRSO for management of ovarian cancer risk until age 40-45 y in patients with *BRCA2* mutations. *
- *(controversy regarding magnitude of impact on breast cancer risk conferred by RRSO in premenopausal women– may be gene specific).*

- ***Rebbeck, Lynch, Neuhausen,. Prophylactic oophorectomy in carriers of BRCA1 or BRCA2 mutations. NEJM 2002.**

For patients who do not elect RRSO

- Transvaginal ultrasound may be considered starting age serum CA-125 at age 30-35 although of uncertain benefit

Menon, Gentry, Hallett, et al. Sensitivity and specificity of multimodal and ultrasound screening for ovarian cancer, and stage distribution of detected cancers: results of the prevalence screen of the UK Collaborative Trial of Ovarian Cancer Screening. Lancet Oncol. 2009.

Psychosocial and quality of life aspects of RRSO

- **The role of risk reducing surgery in HBOC***
  - Meta-analysis of 4 retrospective and prospective observational studies >90% reduction in risk of breast cancer.
  - Psychosocial effects study women a median of 14. 5 years after procedure indicated 74% had reduction in concern about breast cancer; 86% hand favorable or unchanged levels of stress, and 70% were satisfied with their decision to undergo surgery.
  - Dissatisfaction was related to complications with implants and physician advice to undergo mastectomy.
  - Prospective study of high risk women who chose surveillance vs. mastectomy revealed measures of psychological distress, depression and anxiety were decreased significantly in the surgery group but unchanged in the surveillance group. Sexual pleasure was reported same in both groups.
  - ***Hartmann, Lindor. The role of risk reducing surgery in Hereditary Breast and Ovarian Cancer. NEJM Feb. 2016.**

Management of Menopausal Symptoms after RRSO

- Short term hormone replacement therapy in women undergoing RRSO does not negate the reduction in breast cancer risk associated with the surgery.*

*** Rebbeck, Friebel, Wagner. Effect of short term hormone replacement therapy on breast cancer risk reduction after bilateral prophylactic oophorectomy in BRCA1 and BRCA2 mutation carriers: the PROSE Study Group. JCO 2005**

Men with HBOC

www.nccn.org

- Educate Male BSE (MBSE) starting age 35 y
- Clinical breast exam every 12 months starting age 35 y
- Starting at age 45 y:
  - Recommend prostate cancer screening for *BRCA2* carriers (DRE & PSA)
  - Consider prostate cancer screening for *BRCA1* carriers

Men and Women with HBOC

- No specific screening guidelines for **pancreatic cancer and melanoma**, but screening may be individualized based on cancers observed in the family.

Recommendations and Plan for My Patient

- Heightened surveillance.
- Risk reducing BSO (+hysterectomy to allow unopposed estrogen replacement therapy)
- Consultation for risk reducing nipple sparing skin sparing mastectomies with reconstruction
- Referral to pancreatic screening clinic.
- Lifestyle changes – exercise, avoid alcohol, reduce BMI
- Vitamin D supplementation
- (patient declined risk reducing tamoxifen)

The Emerging Role of Multi-Gene Panel Testing

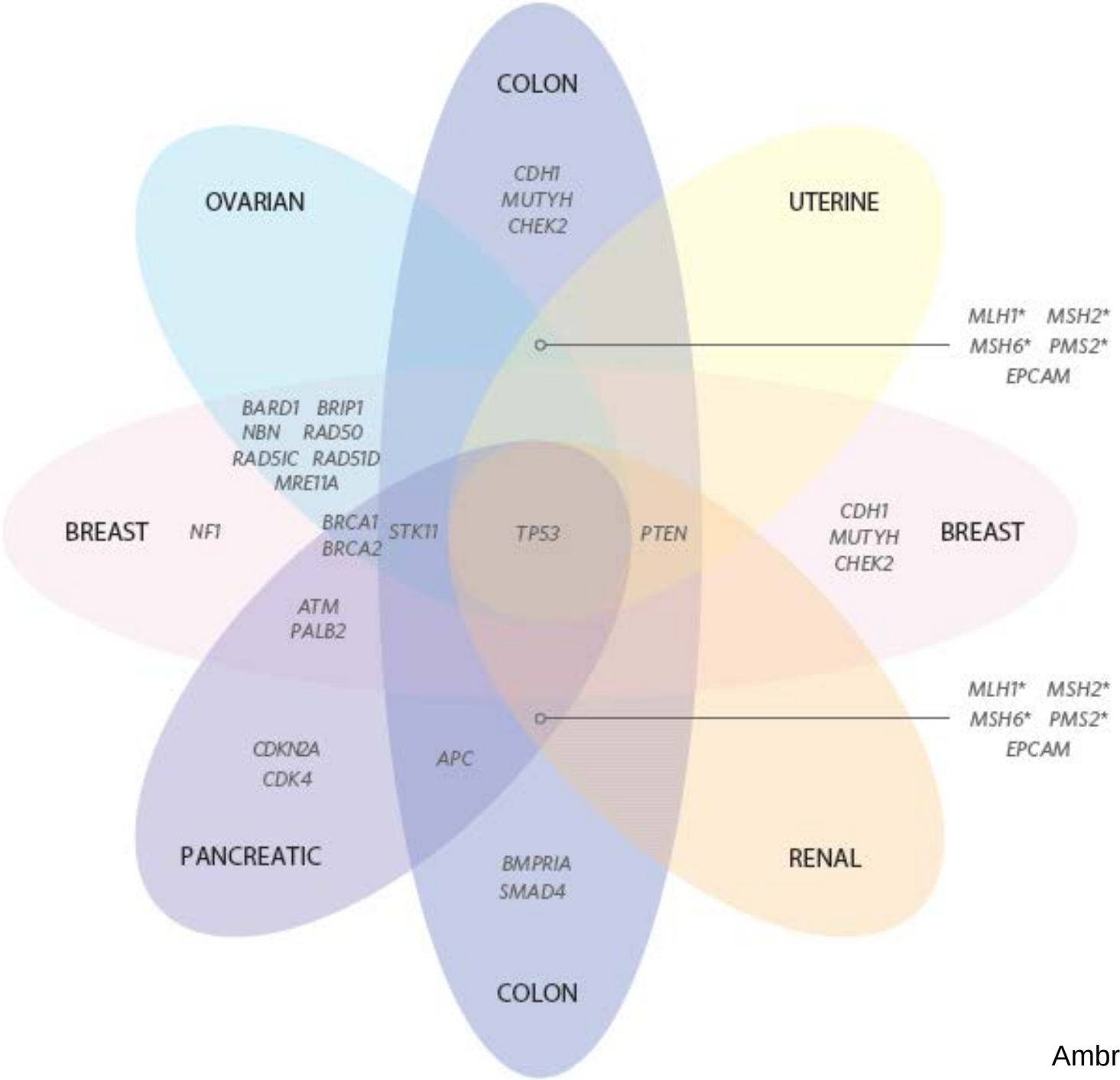
COLON
CDH1
MUTYH
CHEK2
OVARIAN
UTERINE
MLH1* MSH2*
MSH6* PMS2*
EPCAM
BARD1 BRIP1
NBN RAD50
RAD51C RAD51D
MRE11A
BREAST
NF1
BRCA1
BRCA2
STK11
TP53
PTEN
CDH1
MUTYH
CHEK2
BREAST
ATM
PALB2
MLH1* MSH2*
MSH6* PMS2*
EPCAM
CDKN2A
CDK4
APC
PANCREATIC
BMPRIA
SMAD4
RENAL
COLON

Multi – Gene Panel Testing

- Patients with a personal or family history suggestive of a single inherited cancer syndrome are most appropriately managed by genetic testing for that specific syndrome.
- When more than one gene can explain an inherited cancer syndrome, then multi-gene testing may be a more efficient and/or cost effective approach.
- Individuals who test negative for a single syndrome but whose personal or family history remains suggestive of an inherited susceptibility should be consider for multi-gene panels.
- Information from moderate penetrance genes may not change risk management.
- There is an increased likelihood of finding variants of unknown significance
- <u>For these reasons multigene testing is ideally offered in the context of professional genetic counselors.</u>

New Tests

- BRCA1/2 deletion/duplication analysis
  - aka BART (BRACAnalysis Rearrangement Test)
  - Detects the 7% of mutations missed by sequencing
- Tumor testing
- Newly discovered genes
- Hereditary cancer panels (with next generation sequencing)

Hereditary Cancer Multi-Gene Tests

GENES	BRCAplus 6 genes	GYNplus 9 genes	BreastNext 18 genes	OvaNext 23 genes	ColoNext 14 genes	CancerNext 28 genes	PancNext 13 genes	RenalNext 18 genes	PGLNext 10 genes
BARD1			BARD1	BARD1		BARD1			
BRIP1			BRIP1	BRIP1		BRIP1			
MRE11A			MRE11A	MRE11A		MRE11A			
NBN			NBN	NBN		NBN			
NF1			NF1	NF1		NF1			NF1
RAD50			RAD50	RAD50		RAD50			
RAD51C			RAD51C	RAD51C		RAD51C			
RAD51D			RAD51D	RAD51D		RAD51D			
ATM			ATM	ATM		ATM	ATM		
PALB2			PALB2	PALB2		PALB2	PALB2		
MUTYH			MUTYH	MUTYH	MUTYH	MUTYH			
CHEK2			CHEK2	CHEK2	CHEK2	CHEK2			
CDH1	CDH1		CDH1	CDH1	CDH1	CDH1			
STK11	STK11		STK11	STK11	STK11	STK11	STK11		
BRCA1	BRCA1	BRCA1	BRCA1	BRCA1		BRCA1	BRCA1		
BRCA2	BRCA2	BRCA2	BRCA2	BRCA2		BRCA2	BRCA2		
PTEN	PTEN	PTEN	PTEN	PTEN	PTEN	PTEN		PTEN	
TP53	TP53	TP53	TP53	TP53	TP53	TP53	TP53	TP53	
MLH1		MLH1		MLH1	MLH1	MLH1	MLH1	MLH1	
MSH2		MSH2		MSH2	MSH2	MSH2	MSH2	MSH2	
MSH6		MSH6		MSH6	MSH6	MSH6	MSH6	MSH6	
PMS2		PMS2		PMS2	PMS2	PMS2	PMS2	PMS2	
EPCAM		EPCAM		EPCAM	EPCAM	EPCAM	EPCAM	EPCAM	
APC					APC	APC	APC		
BMPR1A					BMPR1A	BMPR1A			
SMAD4					SMAD4	SMAD4			
CDKN2A						CDKN2A	CDKN2A		
CDK4						CDK4			
FH								FH	
FLCN								FLCN	
MET								MET	
MITF								MITF	
TSC1								TSC1	
TSC2								TSC2	
SDHA								SDHA	SDHA
SDHB								SDHB	SDHB
SDHC								SDHC	SDHC
SDHD								SDHD	SDHD
VHL								VHL	VHL
SDHAF2									SDHAF2
MAX									MAX
RET									RET
TMEM127									TMEM127

Types of Mutations/Variants

- Pathogenic/Deleterious Mutation (increased cancer risk)
  - Variant, Suspected Pathogenic

- Variant of Uncertain Significance

  - Variant, Suspected Polymorphism
- Polymorphism (benign mutation)

AMBRY GENETICS EXPERIENCE AS OF JANUARY 2015

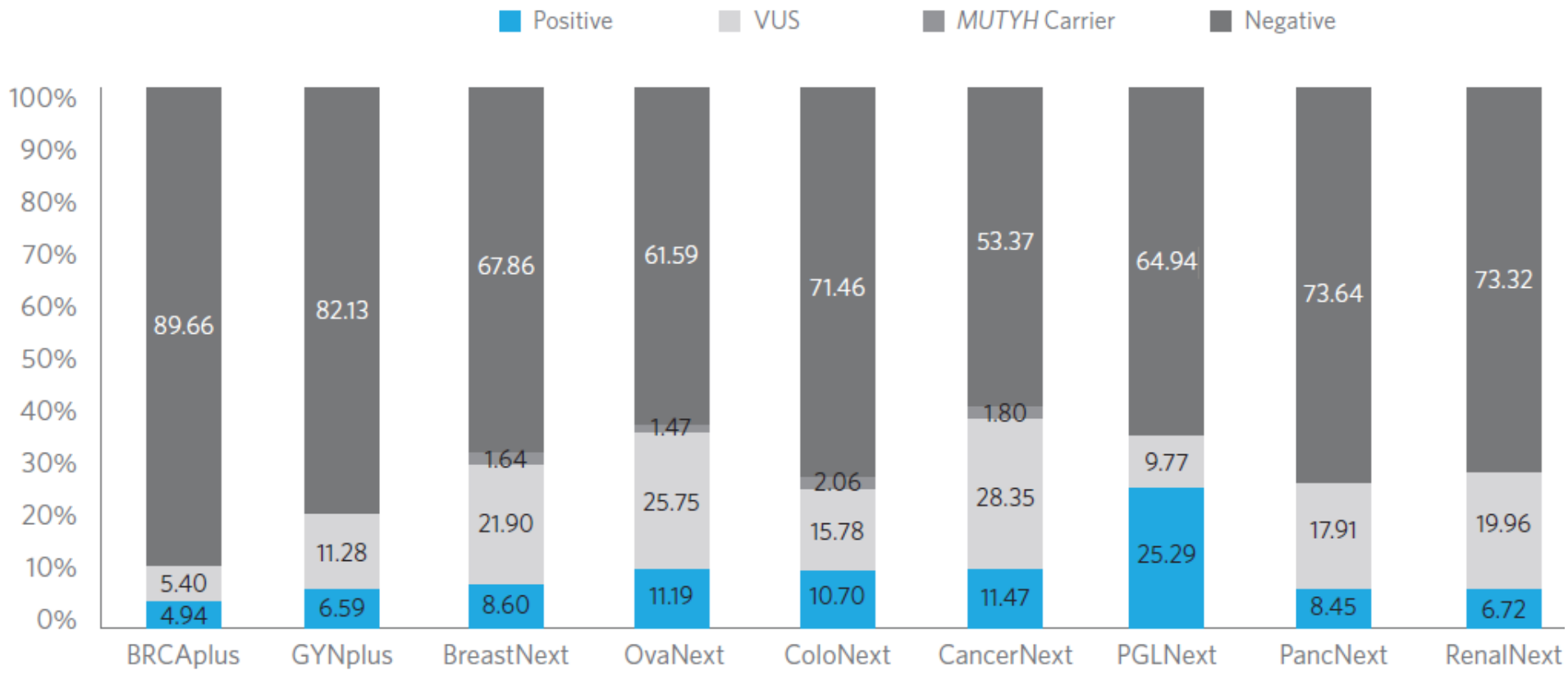

Cancer Genetics and High Risk Team

- **Paul Kolarik, Senior Manager Practice Operations**
- **Deborah Nosotti, MSN, FNP-BC, AOCNP**
- **Irene LaMake, RN**
- **Samantha Read, MA**
- **Ryan Bisson, MS, CGC**
- **Kathryn Schwarting, MS, CGC**
- **Emily Anderson, MS, GC** (June 2018)
- **Connie Edwards, Scheduling Coordinator**
- **Nicholas Pearce, Front Office Assistant**
- **Rebecca Moroose, MD, Medical Director**
- **321-841-GENE (4363)**